Installation guide
M-9553-9735-04-A

RENISHAW
apply innovation™

RESOLUTE™ RESA30/REXA30 absolute angle encoder system

www.renishaw.com/resolutedownloads

#renishaw

This page is intentionally left blank.

Contents

Legal notices

Patents

Features of Renishaw's encoder systems and similar products are the subjects of the following patents and patent applications:

CN1260551	DE10296644	GB2395005	JP4008356	US7499827
CN102197282	EP2350570	JP5480284	KR1630471	US8505210
CN102388295	EP2417423	JP5659220	KR1701535	US10132657
CN102460077	EP2438402	JP5755223	JP6074392	KR1851015
US20120072169	EP01103791	US6465773	EP1094302	JP5442174
US6481115	CN1293983	DE10297440	GB2397040	JP4813018
US7723639	CN1314511	EP1469969	EP2390045	JP5002559
US8466943	US8987633	JP4423196	US7367128	

Terms and conditions and warranty

Unless you and Renishaw have agreed and signed a separate written agreement, the equipment and/or software are sold subject to the Renishaw Standard Terms and Conditions supplied with such equipment and/or software, or available on request from your local Renishaw office.

Renishaw warrants its equipment and software for a limited period (as set out in the Standard Terms and Conditions), provided that they are installed and used exactly as defined in associated Renishaw documentation. You should consult these Standard Terms and Conditions to find out the full details of your warranty.

Equipment and/or software purchased by you from a third-party supplier is subject to separate terms and conditions supplied with such equipment and/or software. You should contact your third-party supplier for details.

Declaration of Conformity

Renishaw plc hereby declares that the RESOLUTE™ encoder system is in compliance with the essential requirements and other relevant provisions of:

- the applicable EU directives
- the relevant statutory instruments under UK law

The full text of the declaration of conformity is available at: **www.renishaw.com/productcompliance**.

Compliance

Federal Code Of Regulation (CFR) FCC Part 15 – RADIO FREQUENCY DEVICES

47 CFR Section 15.19

This device complies with part 15 of the FCC Rules. Operation is subject to the following two conditions: (1) This device may not cause harmful interference, and (2) this device must accept any interference received, including interference that may cause undesired operation.

47 CFR Section 15.21

The user is cautioned that any changes or modifications not expressly approved by Renishaw plc or authorised representative could void the user's authority to operate the equipment.

47 CFR Section 15.105

This equipment has been tested and found to comply with the limits for a Class A digital device, pursuant to part 15 of the FCC Rules. These limits are designed to provide reasonable protection against harmful interference when the equipment is operated in a commercial environment.

This equipment generates, uses, and can radiate radio frequency energy and, if not installed and used in accordance with the instruction manual, may cause harmful interference to radio communications. Operation of this equipment in a residential area is likely to cause harmful interference in which case the user will be required to correct the interference at his own expense.

47 CFR Section 15.27

This unit was tested with shielded cables on the peripheral devices. Shielded cables must be used with the unit to ensure compliance.

Supplier's Declaration of Conformity

47 CFR § 2.1077 Compliance Information

Unique Identifier: RESOLUTE

Responsible Party - U.S. Contact Information

Renishaw Inc.
1001 Wesemann Drive
West Dundee
Illinois
IL 60118
United States
Telephone number: +1 847 286 9953
Email: usa@renishaw.com

ICES-001 — Industrial, Scientific and Medical (ISM) Equipment (Canada)

This ISM device complies with CAN ICES-001.

Cet appareil ISM est conforme à la norme ICES-001 du Canada.

Intended use

The RESOLUTE encoder system is designed to measure position and provide that information to a drive or controller in applications requiring motion control. It must be installed, operated, and maintained as specified in Renishaw documentation and in accordance with the Standard Terms and Conditions of the Warranty and all other relevant legal requirements.

Further information

Further information relating to the RESOLUTE encoder range can be found in the RESOLUTE data sheets. These can be downloaded from our website www.renishaw.com/resolutedownloads and are also available from your local Renishaw representative.

Packaging

The packaging of our products contains the following materials and can be recycled.

Packing component	Material	ISO 11469	Recycling guidance
Outer box	Cardboard	Not applicable	Recyclable
	Polypropylene	PP	Recyclable
Inserts	Low density polyethylene foam	LDPE	Recyclable
	Cardboard	Not applicable	Recyclable
Bags	High density polyethylene bag	HDPE	Recyclable
	Metalised polyethylene	PE	Recyclable

REACH regulation

Information required by Article 33(1) of Regulation (EC) No. 1907/2006 ("REACH") relating to products containing substances of very high concern (SVHCs) is available at www.renishaw.com/REACH.

Disposal of waste electrical and electronic equipment

The use of this symbol on Renishaw products and/or accompanying documentation indicates that the product should not be mixed with general household waste upon disposal. It is the responsibility of the end user to dispose of this product at a designated collection point for waste electrical and electronic equipment (WEEE) to enable reuse or recycling. Correct disposal of this product will help to save valuable resources and prevent potential negative effects on the environment. For more information, contact your local waste disposal service or Renishaw distributor.

Storage and handling

RESOLUTE RESA30 and REXA30 are non-contact optical encoders that provide good immunity against contaminants such as dust, fingerprints and light oils. However, in harsh environments such as machine tool applications, protection should be provided to prevent ingress of coolant or oil.

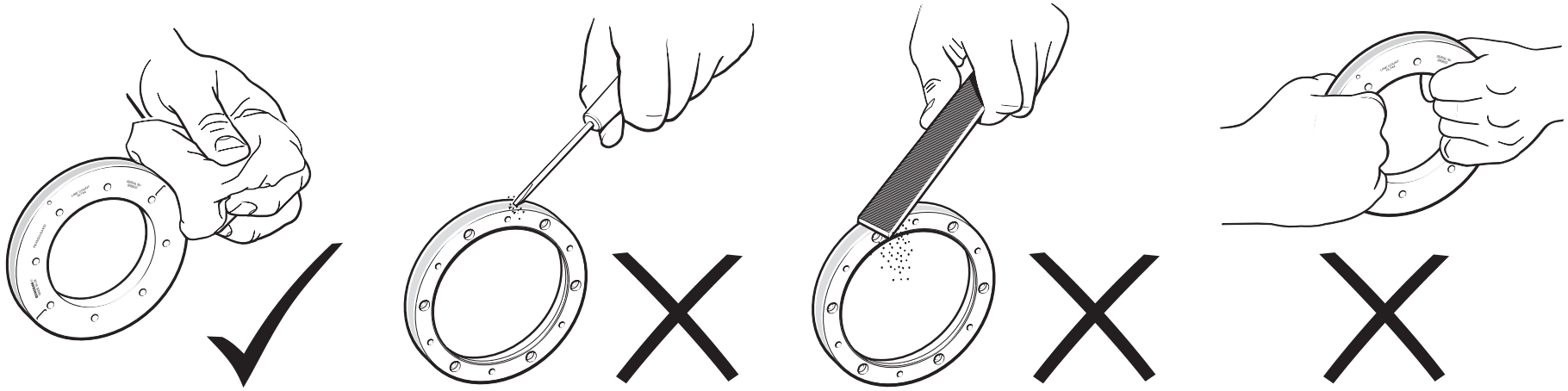

System

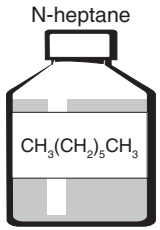

NOTE: Do not use N-heptane on Extended Temperature Range (ETR) readheads

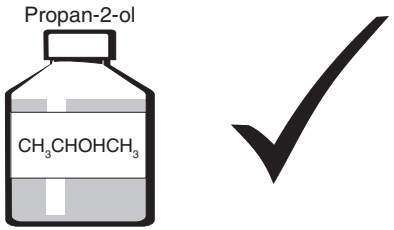

Ring only

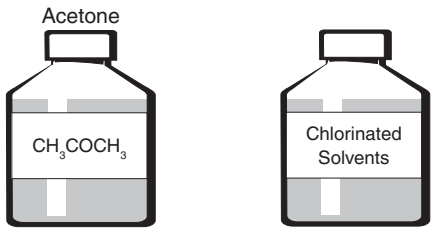

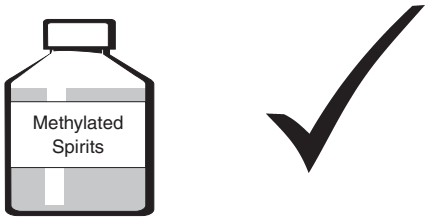

Readhead and DRIVE-CLiQ interface

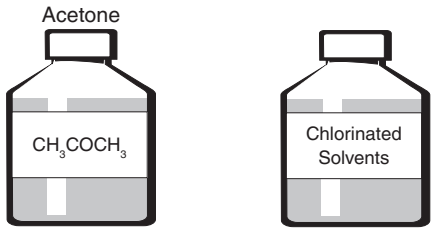

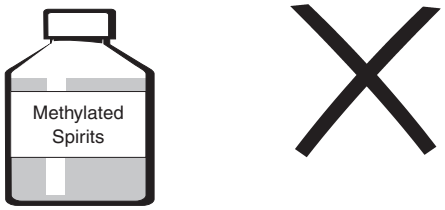

Readhead

Readhead and DRIVE-CLiQ interface

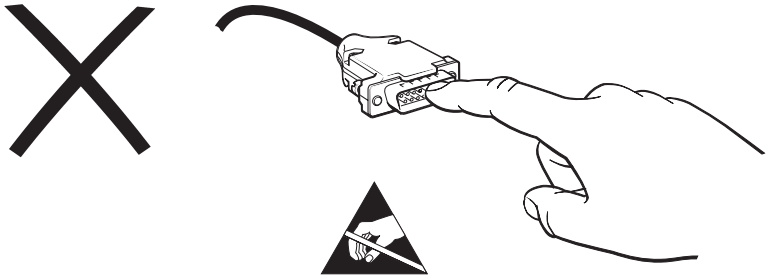

Readhead and DRIVE-CLiQ interface

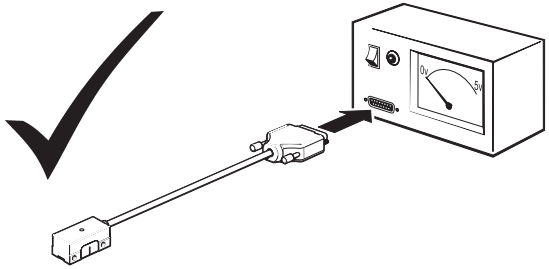

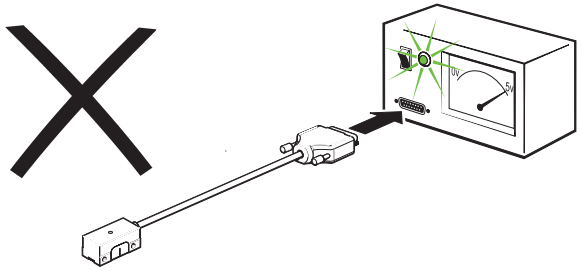

Temperature

Storage	
Standard readhead, DRIVE-CLiQ interface, and RESA30/REXA30 ring	–20 °C to +80 °C
ETR readhead	–40 °C to +80 °C
UHV readhead	0 °C to +80 °C
Bakeout	+120 °C

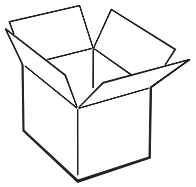

Operating	
Standard readhead	0 °C to +80 °C
ETR readhead and RESA30/REXA30 ring	–40 °C to +80 °C
UHV readhead	0 °C to +75 °C
DRIVE-CLiQ interface	0 °C to +55 °C

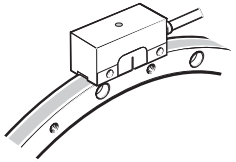

Humidity

Standard readhead and UHV readhead	95% relative humidity (non-condensing) to IEC 60068-2-78
ETR readhead	0 °C to 60 °C, 95% relative humidity decreasing linearly to 40% at 80 °C

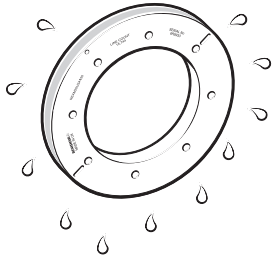

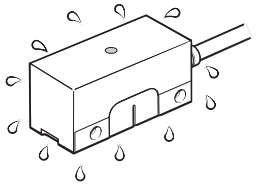

RESOLUTE readhead installation drawing – standard cable outlet

Dimensions and tolerances in mm

NOTE: RESOLUTE readhead shown on RESA30 'A' section ring.

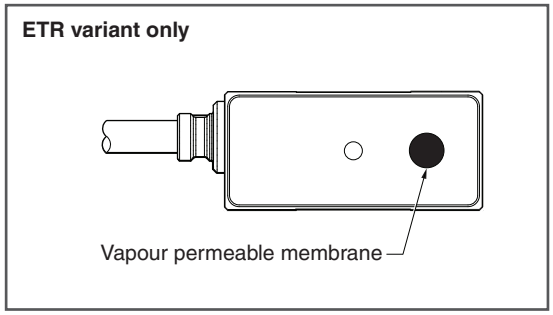

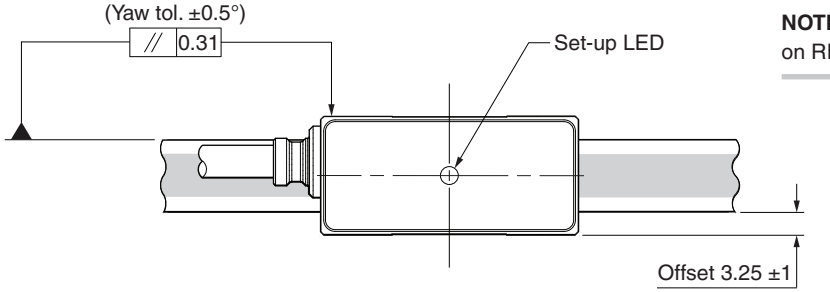

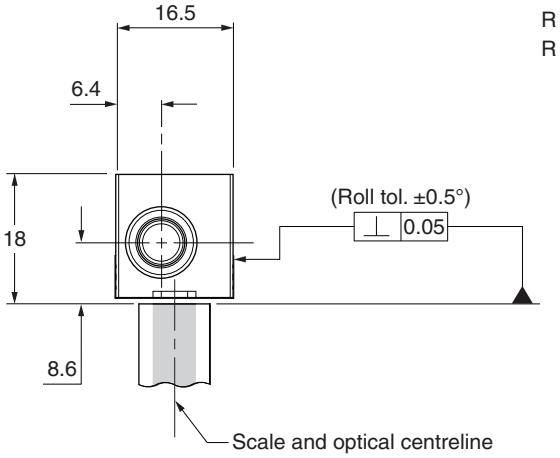

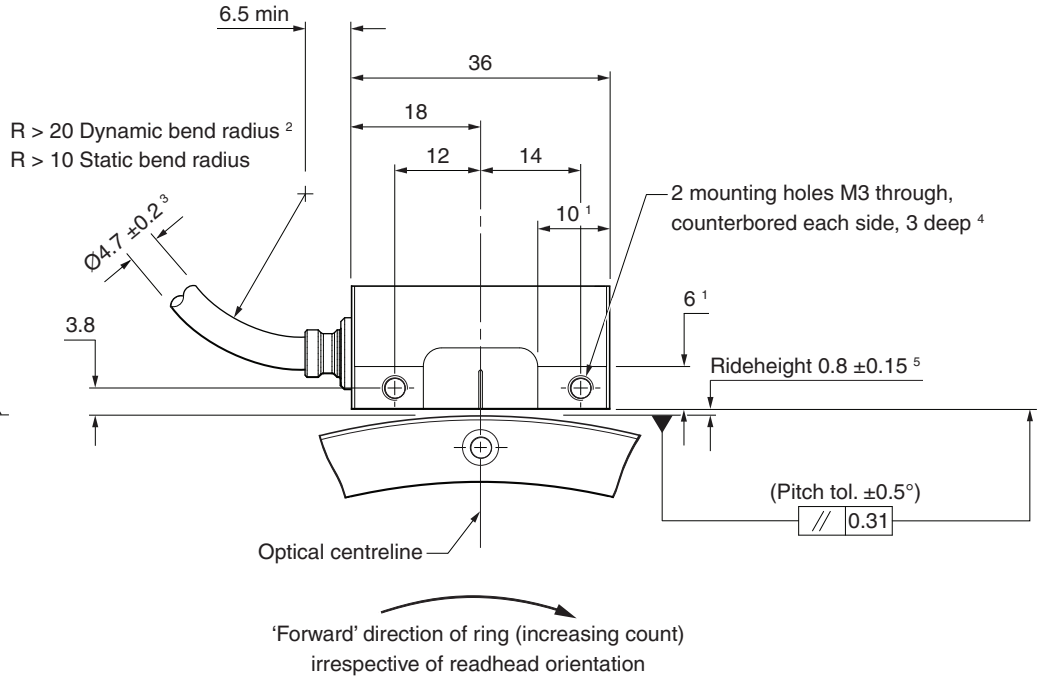

1 Extent of mounting faces.

2 Dynamic bend radius not applicable for UHV cables.

3 UHV cable diameter 2.7 mm.

4 The recommended thread engagement is 5 mm minimum (8 mm including counterbore) and the recommended tightening torque is 0.5 Nm to 0.7 Nm.

5 0.8 ±0.1 mm on 52 mm rings.

RESOLUTE readhead installation drawing – side cable outlet

Dimensions and tolerances in mm

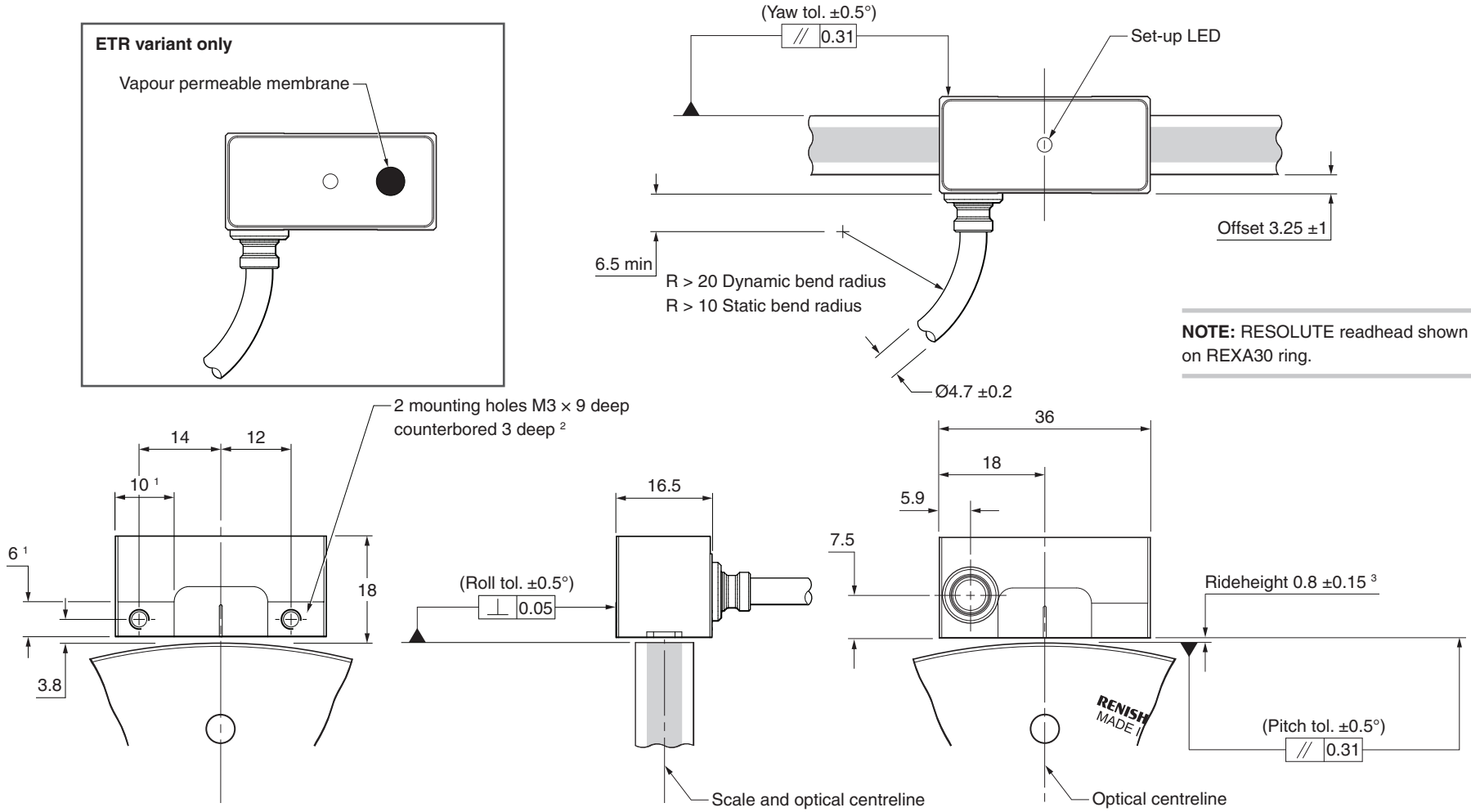

NOTE: RESOLUTE readhead shown on REXA30 ring.

1 Extent of mounting faces.

2 The recommended thread engagement is 5 mm minimum (8 mm including counterbore) and the recommended tightening torque is 0.5 Nm to 0.7 Nm.

3 0.8 ±0.1 mm on 52 mm rings.

RESA30 ‘A’ section ring installation drawing

Dimensions and tolerances in mm

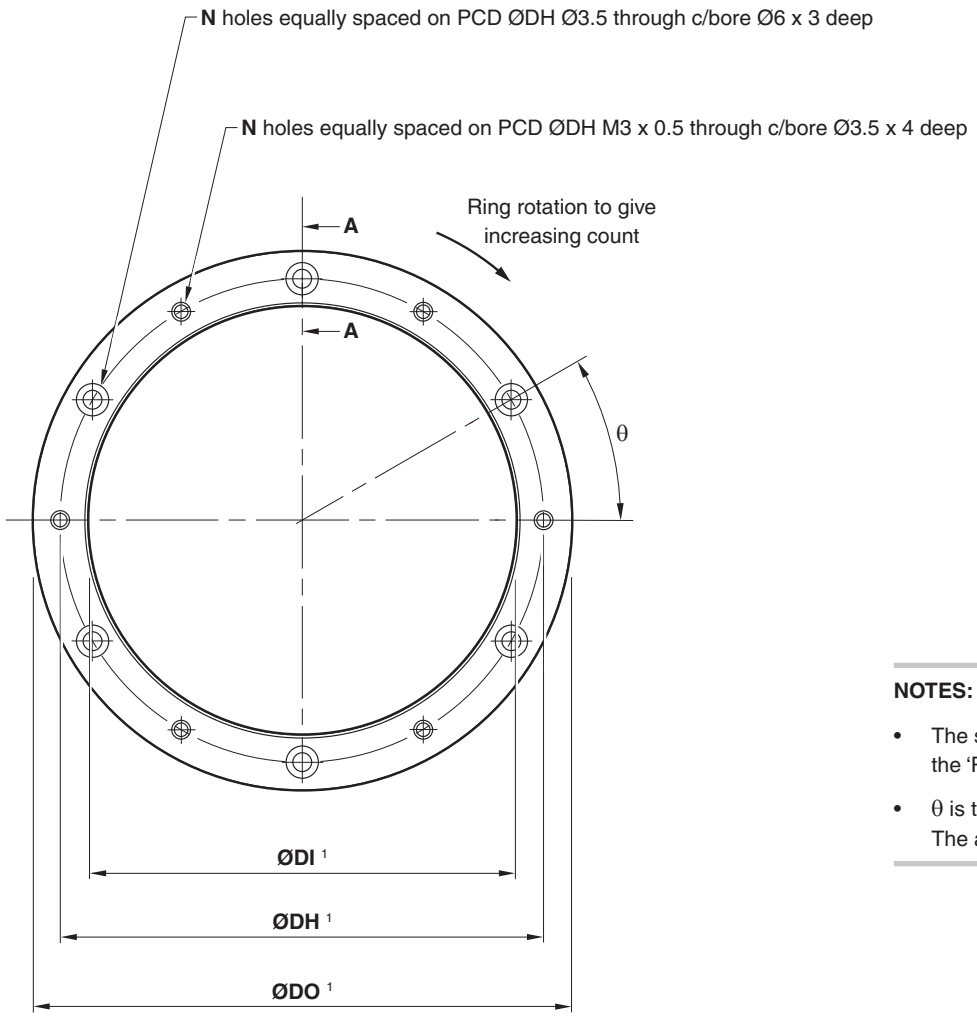

Section A-A

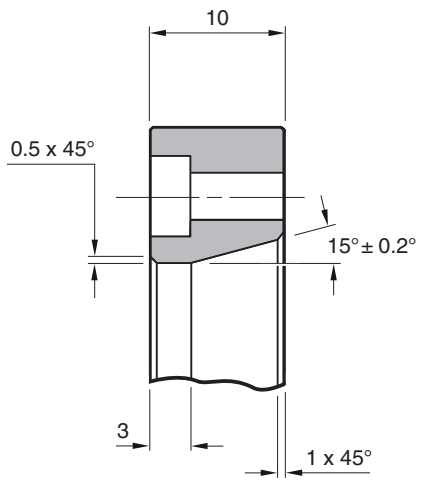

NOTES:

- The scale zero position is radially aligned with the centre of the mounting hole to the left of the ‘Renishaw’ logo.
- θ is the angle between one tapped hole and the adjacent clearance hole. The angle between two clearance holes is 2θ.

[1] The dimensions DO, DI and DH for the RESA ‘A’ section rings are listed on the following page.

RESA30 'A' section ring dimensions

Nominal external diameter (mm)	DO (mm)	DI (mm)	Mounting holes		
			DH (mm)	N	θ
52	52.20 52.10	30.04 30.00	40	6	30°
57	57.35 57.25	37.04 37.00	47	6	30°
75	75.40 75.30	55.04 55.00	65	6	30°
100	100.30 100.20	80.04 80.00	90	6	30°
101	101.30 102.20	80.04 80.00	90	6	30°
103	103.20 103.00	80.04 80.00	90	6	30°
104	104.40 104.20	80.04 80.00	90	6	30°
115	114.70 114.50	95.04 95.00	105	6	30°
124	124.10 123.90	104.04 104.00	114	6	30°
150	150.40 150.20	130.04 130.00	140	9	20°
172	172.04 171.84	152.04 152.00	162	9	20°
183	183.45 183.25	163.04 163.00	172	9	20°
200	200.40 200.20	180.04 180.00	190	12	15°
206	206.50 206.10	186.05 186.00	196	12	15°
209	208.80 208.40	186.05 186.00	196	12	15°
229	229.40 229.00	209.05 209.00	219	12	15°

Nominal external diameter (mm)	DO (mm)	DI (mm)	Mounting holes		
			DH (mm)	N	θ
255	254.80 254.40	235.06 235.00	245	12	15°
280	280.30 279.90	260.06 260.00	270	12	15°
300	300.40 300.20	280.06 280.00	290	16	11.25°
330	330.10 329.90	310.06 310.00	320	16	11.25°
350	350.40 350.20	330.06 330.00	340	16	11.25°
413	412.70 412.30	392.08 392.00	402	18	10°
417	417.40 417.00	380.10 380.00	390	18	10°
489 [1]	489.12 488.72	451.10 450.90	462	20	18°
550	550.20 549.80	510.10 510.00	520	20	9°

IMPORTANT: RESOLUTE readheads must be used with the correct size RESA30 ring. Ensure matching part numbers when ordering.

[1] There are no tapped holes on the 489 mm ring

RESA30 ‘B’ section ring installation drawing

Dimensions and tolerances in mm

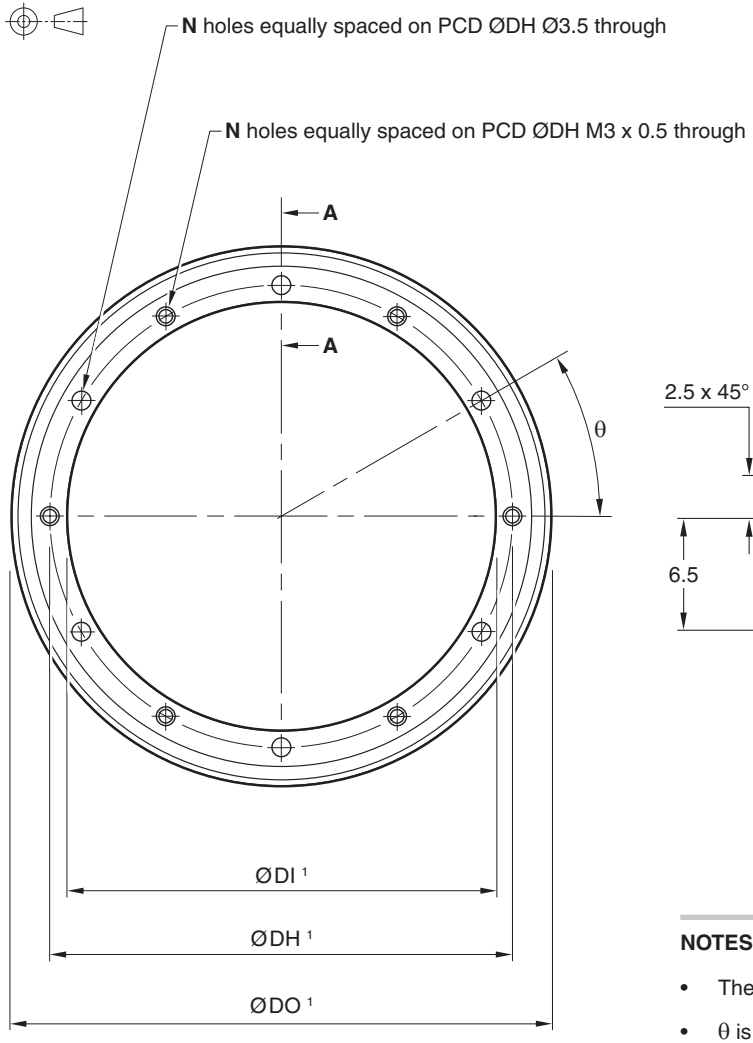

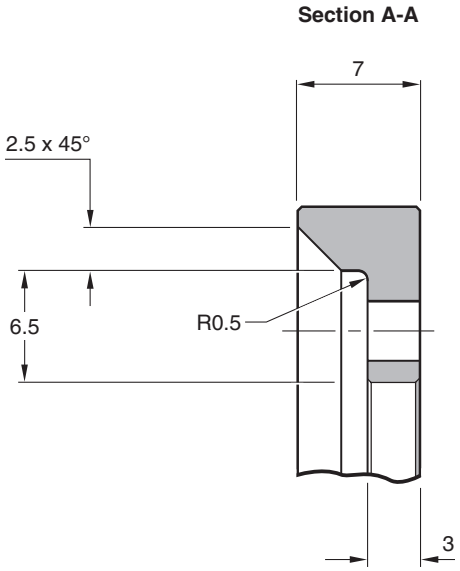

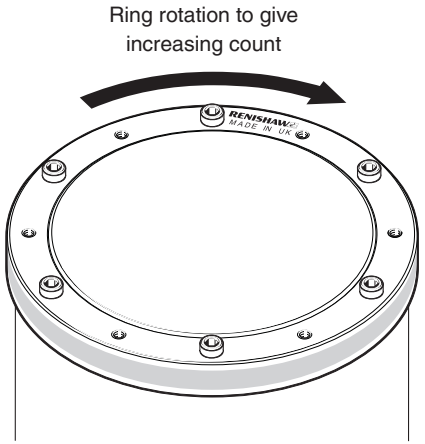

NOTES:

- The scale zero position is radially aligned with the centre of the mounting hole to the left of the ‘Renishaw’ logo.
- θ is the angle between one tapped hole and the adjacent clearance hole. The angle between two clearance holes is 2θ.

[1] The dimensions DO, DI and DH for the RESA ‘B’ section rings are listed on the following page.

RESA30 'B' section ring dimensions

Nominal external diameter (mm)	DO (mm)	DI (mm)	Mounting holes		
			DH (mm)	N	θ
52	52.20 52.10	32.04 32.00	38	6	30°
57	57.35 57.25	37.04 37.00	43	6	30°
75	75.40 75.30	55.04 55.00	61	6	30°
100	100.30 100.20	80.04 80.00	86	6	30°
115	114.70 114.50	95.04 95.00	101	6	30°
150	150.40 150.20	130.04 130.00	136	9	20°
165	165.10 164.90	145.04 145.00	151	9	20°
200	200.40 200.20	180.04 180.00	186	12	15°

IMPORTANT: RESOLUTE readheads must be used with the correct size RESA30 ring. Ensure matching part numbers when ordering.

RESA30 ring mounting options

	Taper mount	Interference fit
'A' section	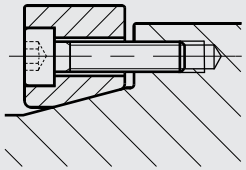	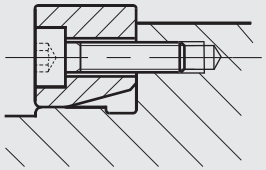
'B' section	Not applicable	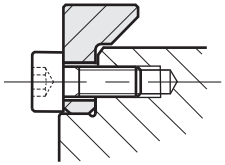
Notes	**Recommended for all installations** • Enables simplest adjustment. • Offers highest accuracy. • Enables eccentricity to be compensated. • Offers excellent mechanical stability against thermal cycling, shock and vibration. • Minimises cost of substrate preparation.	**Alternative installation** • Will not correct eccentricity of the supporting shaft.

Equipment required for taper mounting the RESA30 ‘A’ section ring

Required parts:

- Appropriate RESA ‘A’ section ring (see ‘RESA30 ‘A’ section ring dimensions’ on page 11)
- Appropriate number of screws for ring size (see ‘RESA30 ‘A’ section ring dimensions’ on page 11)

NOTE: Recommended screw type M3 × 0.5 and must comply with ISO 4762/DIN 912 grade 10.9 minimum/ANSI B18.3.1M with a CTE of 10 to 16 µm/m/°C @ 20 °C.

- Dial Test Indicator (DTI)
- Appropriate cleaning solvents (see ‘Storage and handling’ on page 6)
- Hex key
- Torque wrench

Optional parts:

- Renishaw scale wipes (A-9523-4040)
- Lint-free cloth

RESA30 ‘A’ section ring taper mounting

Dimensions and tolerances in mm

Mounting shaft specifications

Recommended taper roundness:

Diameter	Roundness value (TIR)
≤ 115	0.025
150 to 225	0.050
≥ 300	0.075

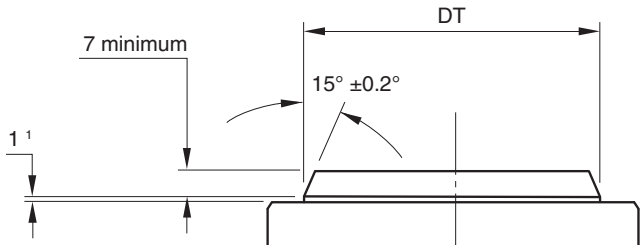

IMPORTANT: When using a RESOLUTE Extended Temperature Range variant (ETR) the hub should be made of a material with a CTE of between 14 and 18 µm/m/°C. For more information on mounting the ring when using ETR, contact your local Renishaw representative.

Recommended taper diameter (DT):

DO	DT	DO	DT	DO	DT	DO	DT	DO	DT
52	33.85 33.65	**103**	83.85 83.65	**172**	155.85 155.65	**229**	212.85 212.65	**350**	333.85 333.65
57	40.85 40.65	**104**	83.85 83.65	**183**	166.85 166.65	**255**	238.85 238.65	**413**	395.85 395.65
75	58.85 58.65	**115**	98.85 98.65	**200**	183.85 183.65	**280**	263.85 263.65	**417**	383.85 383.65
100	83.85 83.65	**124**	107.85 107.65	**206**	189.85 189.65	**300**	283.85 283.65	**489**	454.85 454.65
101	83.85 83.65	**150**	133.85 133.65	**209**	189.85 189.65	**330**	313.85 313.65	**550**	513.85 513.65

DO = Nominal external diameter.

Recommended surface finish ≤ Ra 1.2.

NOTE: It is recommended that the mounting surface is a turned, rather than ground finish.

[1] Allow 2 mm for 417 mm, 489 mm and 550 mm rings only.

- Remove the protective film from the surface of the RESA30 ring.
- Clean shaft taper and internal taper of RESA30 as recommended in 'Storage and handling' on page 6.

Step 1

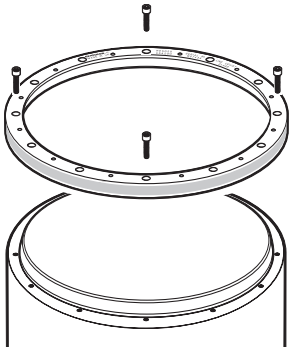

- Insert the first screws
  - For RESA30 rings with 6, 9 or 18 mounting holes, use 3 equally-spaced M3 screws.
  - For RESA30 rings with 12, 16 or 20 mounting holes, use 4 equally-spaced M3 screws.

NOTES: Do not lubricate screws.

- Insert the screws so that the RESA30 is loosely connected to the shaft, then roughly align the ring by eye and touch.
- Lightly tighten the screws. Use a Dial Test Indicator (DTI) to check the radial displacement at the screw locations.

NOTE: Disregard the radial displacement between the screw locations.

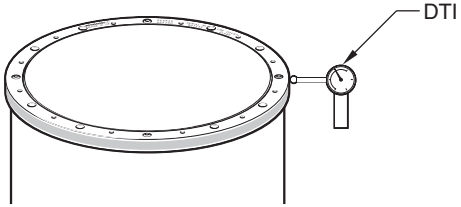

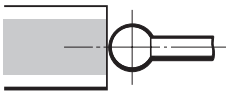

Use a DTI with low exertion force to avoid scratching the scale surface. A DTI with a ruby ball stylus is recommended as a further precaution against scratches.

- Adjust the screws to reduce the range of radial displacement. When adjusting, identify the screw location with the lowest radial displacement and tighten that screw, aiming for the average of the highest and lowest indicator readings.
- Repeat this process until the DTI readings are within ±5 µm at the screw locations.

NOTE: It may be necessary to loosen screws whilst tightening other screws.

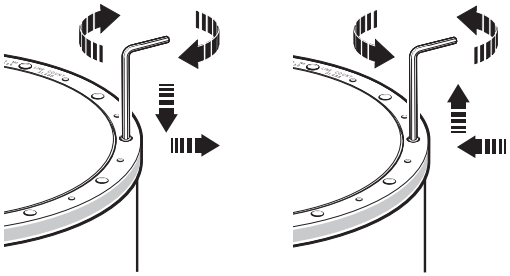

NOTE: At this stage, the screws should only be lightly tightened (less than 0.5 Nm) to allow further final adjustment.

Step 2

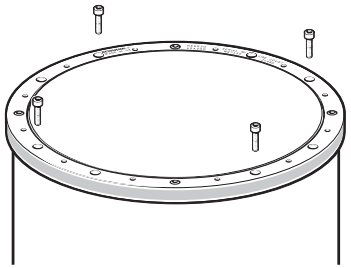

- Insert the next screws:
  - For RESA30 rings with 6, 9 or 12 mounting holes, insert all the remaining M3 screws.
  - For RESA30 rings with 16 mounting holes, insert 4 equally-spaced M3 screws.
  - For RESA30 rings with 18 mounting holes, insert 6 equally-spaced M3 screws.
  - For RESA30 rings with 20 mounting holes, insert 8 equally-spaced M3 screws (in four groups of two) between existing screws.
- As described in Step 1, adjust all the screws already inserted, so that the radial displacement at each screw location is within ±5 µm.
- Again, at this stage, the screws should only be lightly tightened (less than 0.5 Nm).

NOTE: You may notice that the torque required to achieve the radial displacement tolerance will be slightly higher during step 2 than during step 1. This is normal.

Step 3

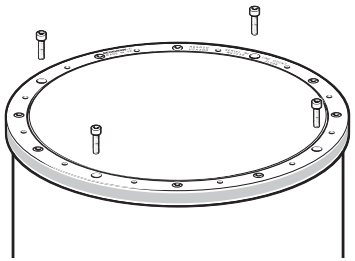

- Insert screws into the remaining mounting holes.

Step 4

Diameter (mm)	Recommended torque range (Nm)
≤ 115	1.5 - 2.1
150 to 255	0.8 - 1.1
300 to 413	0.5 - 0.7
≥ 417	1.2 - 1.7

- Rotate the RESA30 ring, measuring the radial displacement at all of the screw locations.
- Tighten the screw with the lowest radial displacement so that it matches the average radial displacement, whilst ensuring the maximum torque specified in the table is not exceeded.
- Again, rotate the RESA30 ring and re-check the radial displacement at all of the screw locations, tightening the screw with the lowest radial displacement so that it matches the average.
- Repeat this process until the radial displacement at all of the screw locations is within ±3 µm and that all screw torques are within the specified range.
- Excessive tightening of screws can have a small effect on accuracy. Contact your local Renishaw representative for more details.
- Clean ring using Renishaw scale cleaning wipes or a clean, dry, lint-free cloth.

Equipment for interference fit mounting the RESA30 ‘A’ section and RESA30 ‘B’ section rings

Required parts:

- Appropriate RESA ‘A’ or ‘B’ section ring (see ‘RESA30 ‘A’ section ring dimensions’ on page 11 or ‘RESA30 ‘B’ section ring dimensions’ on page 13)
- Appropriate number of screws for ring size (see ‘RESA30 ‘A’ section ring dimensions’ on page 11 or ‘RESA30 ‘B’ section ring dimensions’ on page 13)

NOTE: Recommended screw type M3 × 0.5 and must comply with ISO 4762/DIN 912 grade 10.9 minimum/ANSI B18.3.1M with a CTE of 10 to 16 µm/m/°C @ 20 °C.

- Appropriate cleaning solvents (see ‘Storage and handling’ on page 6)
- Hex key
- Torque wrench

Optional parts:

- Renishaw scale wipes (A-9523-4040)
- Lint-free cloth

RESA30 ‘A’ section and RESA30 ‘B’ section ring interference fit mounting

- Remove the protective film from the surface of the RESA ring.
- Clean the mounting faces of the shaft and the RESA as recommended in ‘Storage and handling’ on page 6.
- Place RESA ring on shaft.

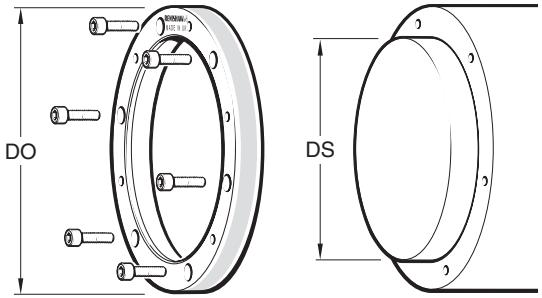

IMPORTANT: When using a RESOLUTE Extended Temperature Range variant (ETR) the hub should be made of a material with a CTE of between 14 and 18 µm/m/°C. For more information on mounting the ring when using ETR, contact your local Renishaw representative. Applies to RESA30 ‘A’ section and ‘B’ section rings.

- Insert screws into all mounting holes.
- Tighten all screws.
- Clean ring using Renishaw scale cleaning wipes or a clean, dry, lint-free cloth.

NOTES:

- Ensure that all screws are tightened to 1.6 Nm.
- The recommended thread engagement is 6 mm.
- 417, 489 and 550 mm rings should be taper mounted only.

Recommended shaft diameter (DS):

DO (mm)	DS (mm)	DO (mm)	DS (mm)
52 [1]	30.033 30.017	**183**	163.052 163.027
57	37.033 37.017	**200**	180.052 180.027
75	55.039 55.020	**206**	186.060 186.031
100	80.045 80.023	**209**	186.060 186.031
101	80.045 80.023	**229**	209.060 209.031
103	80.045 80.023	**255**	235.060 235.031
104	80.045 80.023	**280**	260.066 260.034
115	95.045 95.023	**300**	280.066 280.034
124	104.045 104.023	**330**	310.066 310.034
150	130.052 130.027	**350**	330.073 330.037
165 [2]	145.052 145.027	**413**	392.073 392.037
172	152.052 152.027		

DO = Nominal external diameter

1 52 mm ‘B’ section ring **DS (mm)** = 32.033
32.017

2 Only available as a ‘B’ section ring.

REXA30 ring installation drawing

Dimensions and tolerances in mm

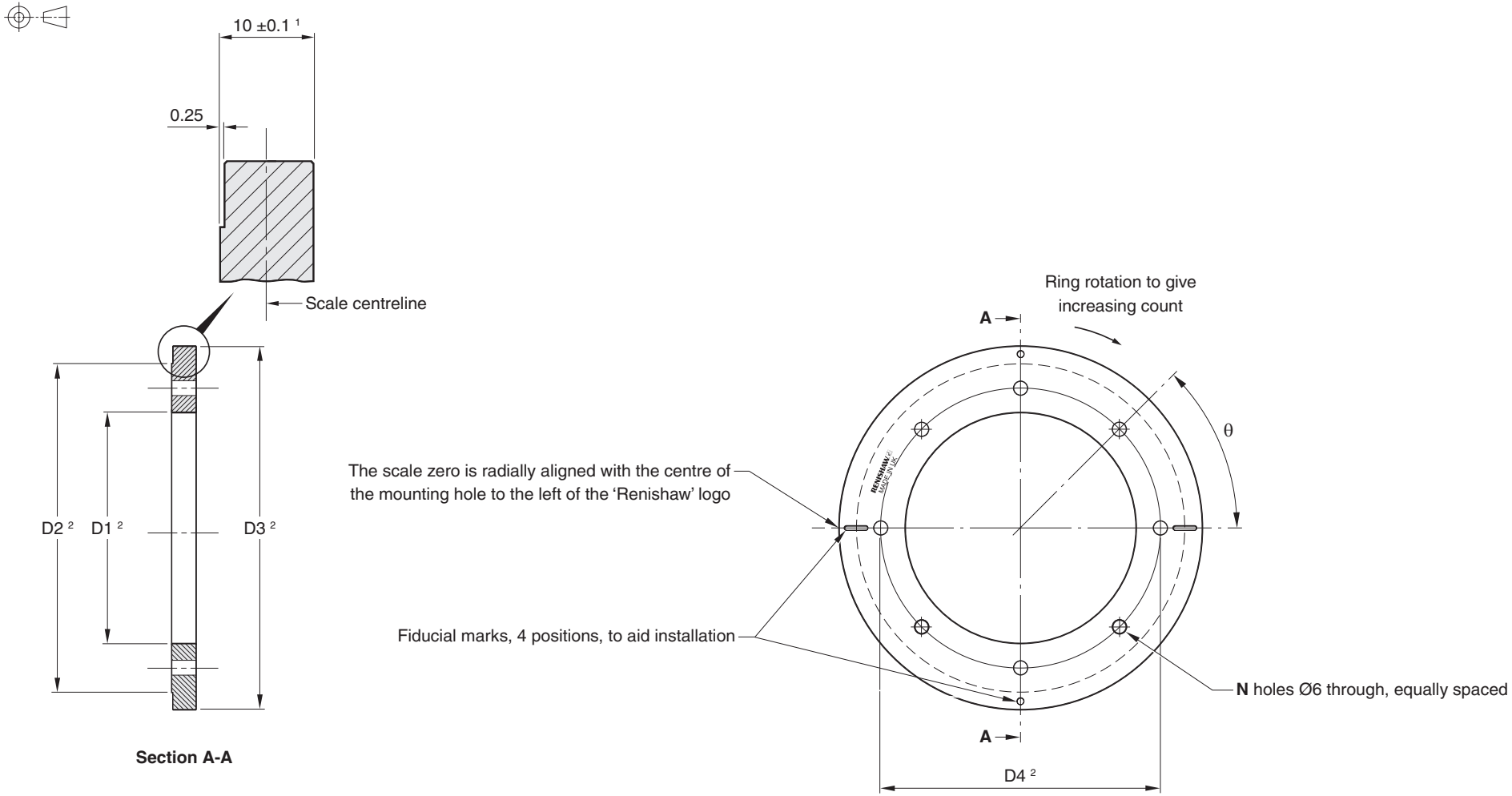

[1] Graduations are centered within this dimension.

[2] The dimensions D1, D2, D3 and D4 for the REXA30 rings are listed on the following page.

REXA30 ring dimensions

Nominal external diameter	Dimensions			Mounting holes		
	D1	D2	D3	D4	N	θ
52 [1]	26	50	52.1 - 52.2	38	4	90°
57 [1]	26	50	57.25 - 57.35	38	4	90°
75	40.5	64.5	75.3 - 75.4	52.5	8	45°
100	57.5	97.5	100.2 - 100.3	77.5	8	45°
103	57.5	97.5	103.0 - 103.2	77.5	8	45°
104	57.5	97.5	104.2 - 104.4	77.5	8	45°
115	68	108	114.5 - 114.7	88	8	45°
150	96	136	150.2 - 150.4	116	8	45°
183	122.5	162.5	183.2 - 183.4	142.5	12	30°
200	136	176	200.2 - 200.4	156	12	30°
206	140.5	180.5	206.1 - 206.5	160.5	12	30°
209	140.5	180.5	208.4 - 208.8	160.5	12	30°
229	160.5	200.5	229.0 - 229.4	180.5	12	30°
255	180.5	220.5	254.4 - 254.8	200.5	12	30°
300	216	256	300.2 - 300.4	236	12	30°
350	256	296	350.2 - 350.4	276	16	22.5°
417	305	345	417.0 - 417.4	325	16	22.5°

IMPORTANT: RESOLUTE readheads must be used with the correct size REXA30 ring. Ensure matching part numbers when ordering.

[1] 52 mm and 57 mm rings have dimple fiducial features and no slots.

Equipment for flange mounting the REXA30 ring

Required parts:

- Appropriate REXA ring (see 'REXA30 ring dimensions' on page 23)
- Appropriate number of screws for ring size (see 'REXA30 ring dimensions' on page 23)

NOTE: Recommended screw type M5 × 0.8 and must comply with ISO 4762 / DIN 912 grade 10.9 minimum / ANSI B18.3.1M with a CTE of 10 to 16 µm/m/°C @ 20 °C.

- Dial Test Indicator (DTI)
- Rubber mallet
- Appropriate cleaning solvents (see 'Storage and handling' on page 6)
- Hex key
- Torque wrench

Optional parts:

- Renishaw scale wipes (A-9523-4040)
- Lint-free cloth

REXA30 ring flange mounting

- The REXA30 ring should be flange mounted onto a flat surface to minimise 2-per-rev distortion.
- Taper mounting is not suitable for thick cross-section REXA rings.
- To avoid distorting to the scale, the REXA should not be interference fitted.
- Some eccentricity of the ring is acceptable because it will be compensated using two readheads.

NOTE: If using REXA30 with RESOLUTE ETR, contact your local Renishaw representative.

Dimensions and tolerances in mm

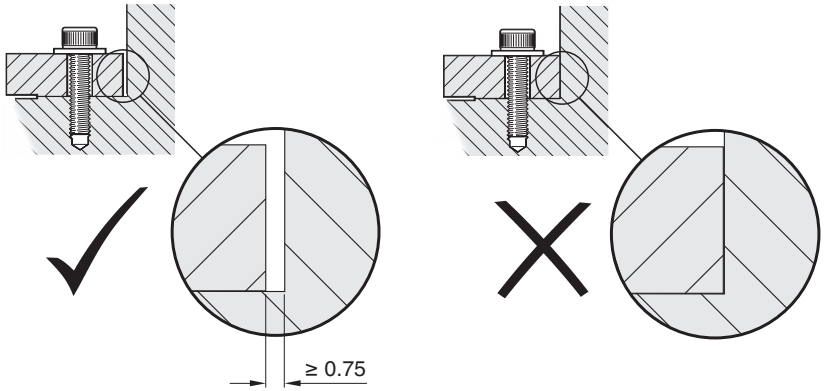

Mounting shaft preparation

There is a mounting face on the lower side of the REXA30 ring (diameter D2).

A flat surface should be prepared on the mounting shaft to match.

The total axial run-out of the mounting surface should be within 10 µm.

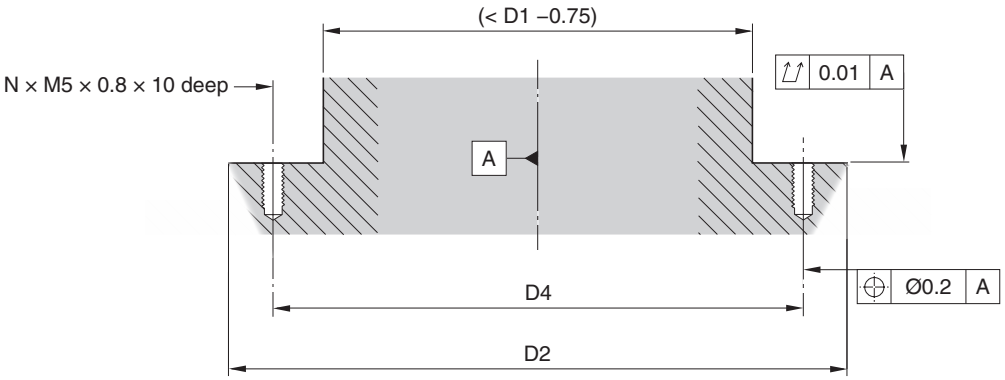

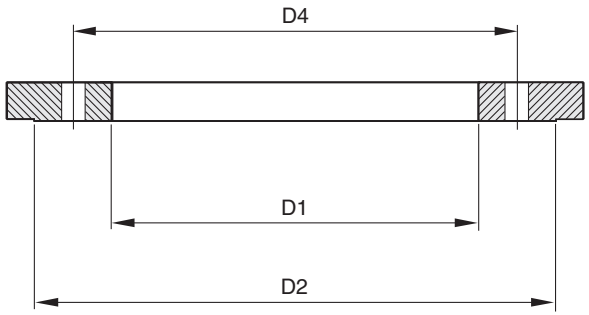

For dimensions D1, D2, D4 and number of holes N, refer to 'REXA30 ring dimensions' on page 23.

Mounting the REXA30 ring

- Clean the mounting face on the lower side of the REXA (see 'Storage and handling' on page 6).
- Clean the mating surface on the mounting shaft (see 'Storage and handling' on page 6).
- Place the REXA onto the mounting shaft, then insert four off M5 screws with flat washers into the four screw holes by the fiducial marks.

IMPORTANT: Do not tighten the screws at this point; simply engage the threads ensuring that the heads do not touch the ring.

- The recommended thread engagement is 10 mm.

NOTES:

- Do not lubricate screws.
- Do not use a locking compound.

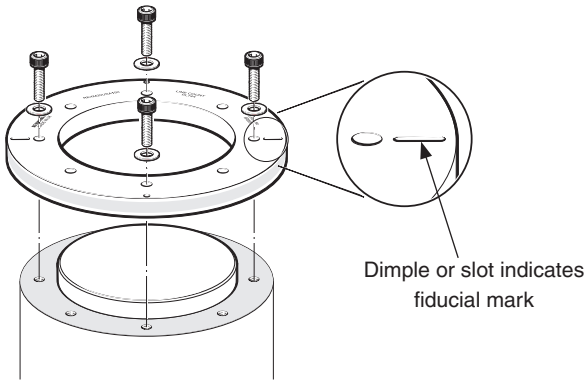

Adjusting the REXA30 ring

Step 1

- Remove the protective film from the surface of the REXA.
- Measure the run-out on the REXA ring using a Dial Test Indicator (DTI) to. Use a DTI with low exertion force to avoid scratching the scale surface. A DTI with a ruby ball stylus is recommended as a further precaution against scratches.

NOTE: At this stage the ring is not firmly fixed, so to avoid causing the ring to shift position, rotate the ring slowly and smoothly.

- Where the DTI shows the lowest radius reading, gently tap the opposite side of the ring on the edge using a rubber mallet, until the DTI reading is approximately at the 'mid-point' of the run-out.
- Find the new lowest radius reading.
- Tap the opposite side of the ring with a rubber mallet until the DTI reading is at the 'mid-point' of the run-out.
- Repeat this process until the run-out of the ring is approximately 30 µm TIR (0.0012 inches).

Step 2

- Adjust ring position until the DTI (dial test indicator) reading at these points agrees to 10 µm TIR.

NOTE: 52 mm and 57 mm rings do not have 'slot' fiducials marked.

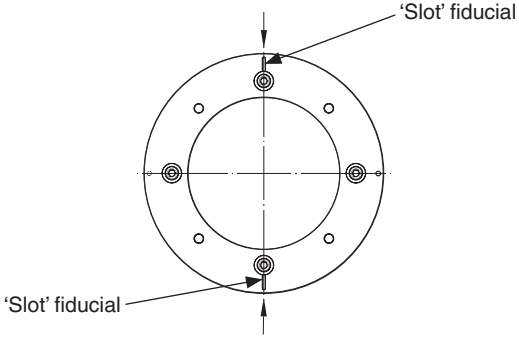

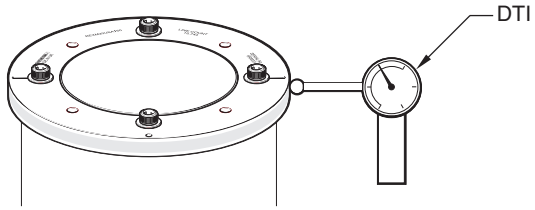

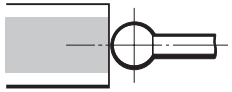

Use a DTI with low exertion force to avoid scratching the scale surface. A DTI with a ruby ball stylus is recommended as a further precaution against scratches.

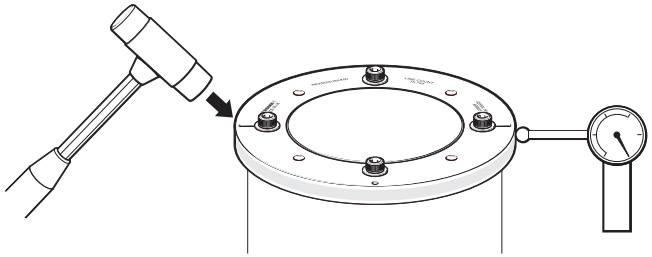

Step 3

- Rotate the ring by 90°.
- Adjust the ring position until the DTI (dial test indicator) reading at these points agrees to 10 µm TIR.

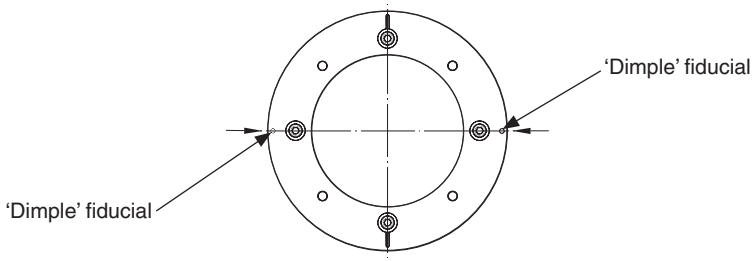

Step 4

- Re-check the run-out at the two 'slot' fiducial points, to ensure the run-out is still within 10 µm TIR. Adjust if necessary.
- Gradually tighten the 4 screws in turn, enough to grip and lightly secure the ring so as to avoid moving the position of the ring.
- Insert the remaining M5 screws and, in a sequential pattern, gradually tighten them to a torque of 4 Nm.
- Re-check the run-out at the two 'slot' fiducial points, then at the two 'dimple' fiducial points.

NOTE: The run-out values at the 'slot' fiducial points do not have to match the run-out values at the 'dimple' fiducial points.

- If the ring has moved position outside the 10 µm limit, the screws must be loosened and the ring adjusted.
- Clean ring using Renishaw scale cleaning wipes or a clean, dry, lint-free cloth.

Siemens DRIVE-CLiQ dual head installation

Accuracy

The dual head interface is designed for use with two RESOLUTE readheads and REXA30 ring only and compensates for the effect of bearing wander and eliminates all odd error harmonics including eccentricity. However, 'even' error harmonics such as ovality remain. This results in high angular accuracy to ±1 arc second, as shown in the accompanying table.

REXA30 diameter	Total installed accuracy (with 2 readheads)
≥ 100 mm	±1 arc second
75 mm	±1.5 arc second
≤ 57 mm	±2 arc second

For optimum accuracy performance, the readheads should be diametrically opposite each other so that the optical centre lines are 180° apart. However if this is not possible due to mounting constrictions, or for partial arc applications, the readheads should be mounted as close to this as possible; contact your local Renishaw representative to find out what accuracy you can expect if this is the case.

Interface output

For readheads (RH1 and RH2) mounted such that the angle between them is θ.

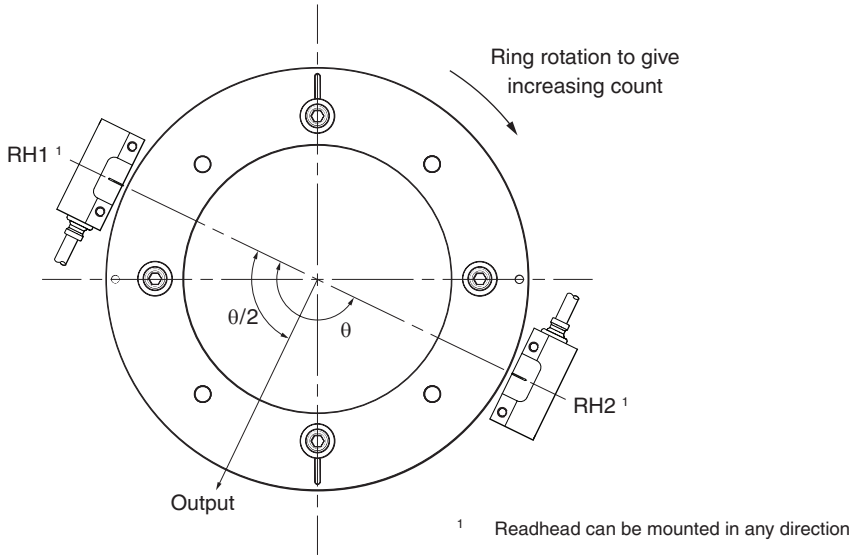

[1] Readhead can be mounted in any direction

The dual head DRIVE-CLiQ interface takes simultaneous readings from both readheads and calculates the mean of them. The output is therefore at an angle of θ/2 and is in the position shown when the scale is orientated with increasing count as shown.

Summary of procedure

Install both readheads on mounting surfaces.

↓

Connect both readheads to dual head interface and connect interface to controller.

↓

Supply power to the controller and interface, adjust each readhead such that both readheads have good signal levels around the ring (green or blue indication).

↓

Acknowledge any errors on the controller that may have occurred during installation.

RESOLUTE readhead mounting and alignment

Mounting brackets

The bracket must have a flat mounting surface and should provide adjustment to enable conformance to the installation tolerances, allow adjustment to the rideheight of the readhead, and be sufficiently stiff to prevent deflection or vibration of the readhead during operation.

Readhead set-up

Ensure that the ring, readhead optical window and mounting face are clean and free from obstructions.

NOTE: When cleaning the readhead and ring apply cleaning fluid sparingly, do not soak.

To set nominal rideheight, place the blue spacer with the aperture under the optical centre of the readhead to allow normal LED function during set-up procedure. Adjust the readhead to maximize the signal strength to achieve a green or blue LED for a full rotation of the ring.

NOTES:

- Flashing of set-up LED indicates scale reading error. The flashing state is latched for some serial protocols; remove power to reset.
- The optional Advanced Diagnostic Tool ADTa-100 [1] (A-6525-0100) and ADT View software [2] can be used to aid installation. The ADTa-100 and ADT View software are only compatible with RESOLUTE readheads showing the ADT mark. Contact your local Renishaw representative for other readhead compatibility.

[1] For more details refer to the Advanced Diagnostic Tools and ADT View software User guide (Renishaw part no. M-6195-9413).

[2] The software can be downloaded for free from www.renishaw.com/adt.

[3] The LED is activated regardless of whether the corresponding messages have been reconfigured.

[4] The colour depends upon the LED status when component recognition is activated via p0144=1.

RESOLUTE readhead and DRIVE-CLiQ interface status LEDs

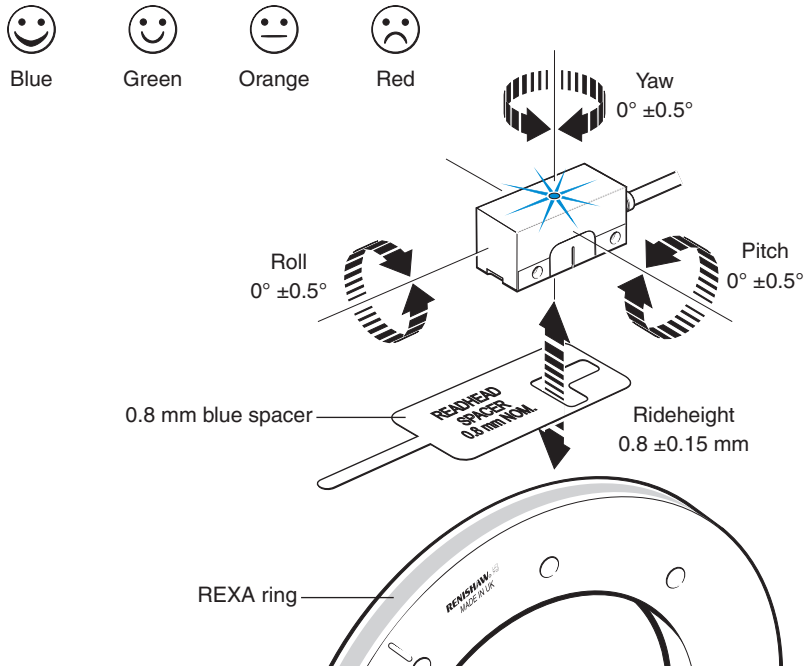

DRIVE-CLiQ interface RDY LED functions

Colour	Status	Description
-	Off	Power supply is missing or outside of permissible tolerance range
Green	Continuous light	The component is ready for operation and cyclic DRIVE-CLiQ communication is taking place
Orange	Continuous light	DRIVE-CLiQ communication is being established
Red	Continuous light	At least one fault is present in this component [3]
Green/orange or red/orange	Flashing light	Component recognition via LED is activated (p0144) [4]

RESOLUTE readhead signals

BiSS C serial interface

Function		Signal [1]	Wire colour	Pin			
				9-way D-type (A)	LEMO (L)	M12 (S)	13-way JST (F)
Power		5 V	Brown	4, 5	11	2	9
		0 V	White	8, 9	8, 12	5, 8	5, 7
			Green				
Serial communications		MA+	Violet	2	2	3	11
		MA–	Yellow	3	1	4	13
		SLO+	Grey	6	3	7	1
		SLO–	Pink	7	4	6	3
Shield	Single	Shield	Shield	Case	Case	Case	External
	Double	Inner	Inner shield	1	10	1	External
		Outer	Outer shield	Case	Case	Case	External

[1] For details, refer to *BiSS C-mode (unidirectional) for RESOLUTE encoders* data sheet (Renishaw part no. L-9709-9005).

NOTE: For RESOLUTE BiSS UHV readheads only 13-way JST (F) option is available.

FANUC serial interface

Function		Signal	Wire colour	Pin			
				9-way D-type (A)	LEMO (L)	20-way (H)	13-way JST (F)
Power		5 V	Brown	4, 5	11	9, 20	9
		0 V	White	8, 9	8, 12	12, 14	5, 7
			Green				
Serial communications		REQ	Violet	2	2	5	11
		*REQ	Yellow	3	1	6	13
		SD	Grey	6	3	1	1
		*SD	Pink	7	4	2	3
Shield	Single	Shield	Shield	Case	Case	External, 16	External
	Double	Inner	Inner shield	1	10	16	External
		Outer	Outer shield	Case	Case	External	External

Mitsubishi serial interface

Function		Signal	Wire colour	Pin				
				9-way D-type (A)	10-way Mitsubishi (P)	15-way D-type (N)	LEMO (L)	13-way JST (F)
Power		5 V	Brown	4, 5	1	7, 8	11	9
		0 V	White	8, 9	2	2, 9	8, 12	5, 7
			Green					
Serial communications		MR	Violet	2	3	10	2	11
		MRR	Yellow	3	4	1	1	13
		MD [1]	Grey	6	7	11	3	1
		MDR [1]	Pink	7	8	3	4	3
Shield	Single	Shield	Shield	Case	Case	Case	Case	External
	Double	Inner	Inner shield	1	Not applicable	15	10	External
		Outer	Outer shield	Case		Case	Case	External

[1] For 2 wire RESOLUTE Mitsubishi readheads do not connect MD and MDR.

Panasonic/Omron serial interface

Function		Signal	Wire colour	Pin			
				9-way D-type (A)	LEMO (L)	M12 (S)	13-way JST (F)
Power		5 V	Brown	4, 5	11	2	9
		0 V	White	8, 9	8, 12	5, 8	5, 7
			Green				
Serial communications		PS	Violet	2	2	3	11
		$\overline{PS}$	Yellow	3	1	4	13
Shield	Single	Shield	Shield	Case	Case	Case	External
	Double	Inner	Inner shield	1	10	1	External
		Outer	Outer shield	Case	Case	Case	External
Reserved		**Do not connect**	Grey	6	3	7	1
			Pink	7	4	6	3

NOTE: For RESOLUTE Panasonic UHV readheads only 13-way JST (F) option is available.

Siemens DRIVE-CLiQ serial interface

DRIVE-CLiQ readhead output

Function		Signal	Wire colour	Pin	
				M12 (S)	13-way JST (F)
Power		5 V	Brown	2	9
		0 V	White	5, 8	5, 7
			Green		
Serial communications		A+	Violet	3	11
		A–	Yellow	4	13
Shield	Single	Shield	Shield	Case	External
	Double	Inner	Inner shield	1	External
		Outer	Outer shield	Case	External
Reserved		**Do not connect**	Grey	7	1
			Pink	6	3

DRIVE-CLiQ interface output

Function	Signal	Pin
		M12
Power	24 V	1
	0 V	5
DRIVE-CLiQ communications	RX+	3
	RX–	4
	TX+	7
	TX–	6
Shield	Shield	Case

Yaskawa serial interface

Function	Signal	Wire colour	Pin			
			9-way D-type (A)	LEMO (L)	M12 (S)	13-way JST (F)
Power	5 V	Brown	4, 5	11	2	9
	0 V	White	8, 9	8, 12	5, 8	5, 7
		Green				
Serial communications	S	Violet	2	2	3	11
	$\overline{S}$	Yellow	3	1	4	13
Shield	Shield	Shield	Case	Case	Case	External
Reserved	**Do not connect**	Grey	6	3	7	1
		Pink	7	4	6	3

RESOLUTE readhead termination options

9-way D-type connector (Termination code A)

Plugs directly into the optional Advanced Diagnostic Tool ADTa-100 [1]
(ADT compatible readheads only)

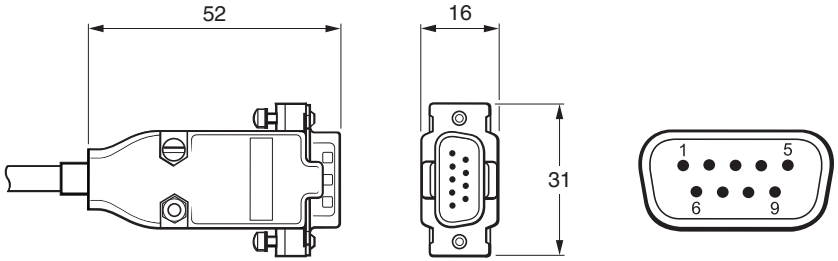

M12 (sealed) connector (Termination code S)

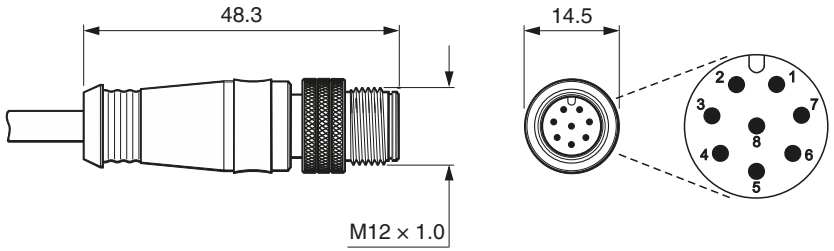

LEMO in-line connector (Termination code L)

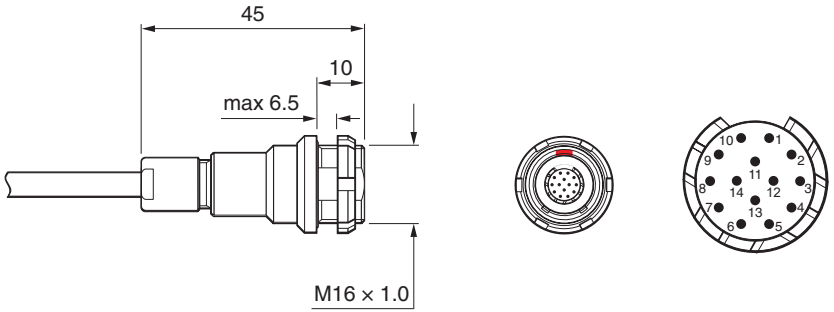

13-way flying lead [2] (Termination code F) (single-shielded cable shown)

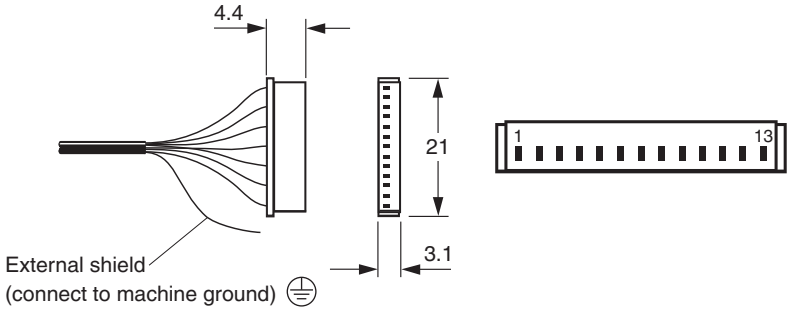

[1] For more details refer to the *Advanced Diagnostic Tools and ADT View software* User guide (Renishaw part no. M-6195-9413)

[2] JST part number: 13ZR-3H-P

15-way D-type Mitsubishi connector (Termination code N)

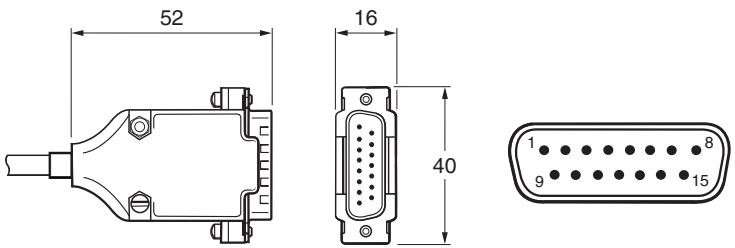

20-way FANUC connector (Termination code H)

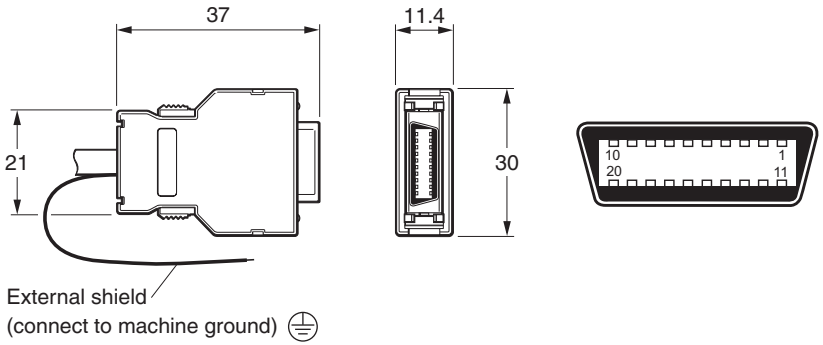

10-way Mitsubishi connector (Termination code P)

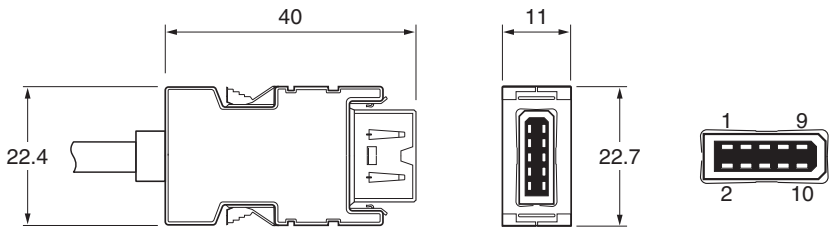

Siemens DRIVE-CLiQ interface drawing – single readhead input

Dimensions and tolerances in mm

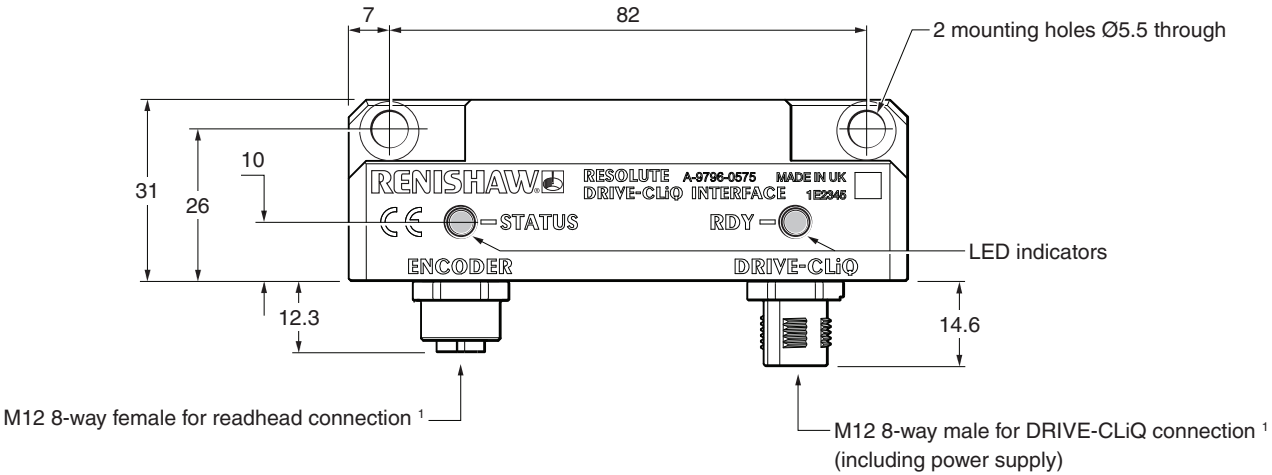

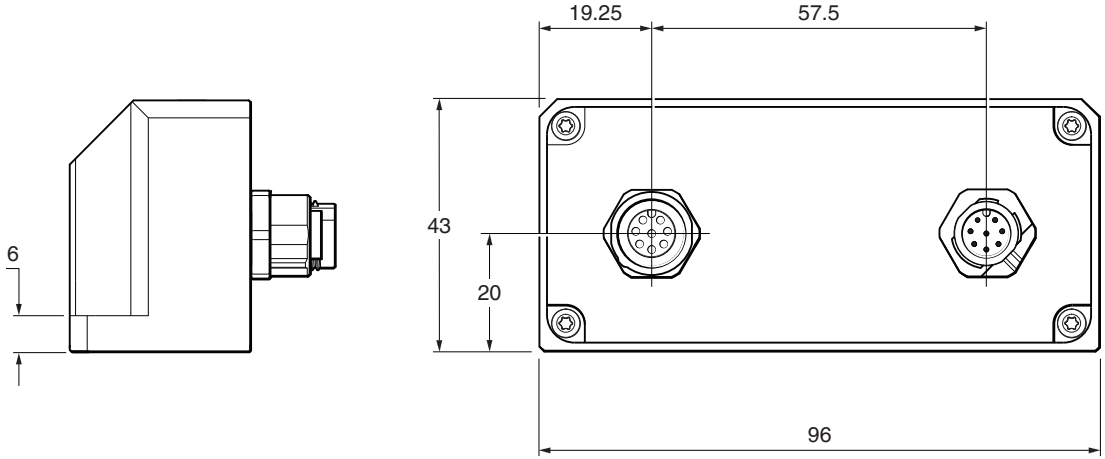

Interface part number	Compatible readheads
A-9777-0575	RAxxDA
	RAxxDS
A-9796-0575	RAxxDB
	RAxxDR

[1] Maximum tightening torque 4 Nm.

Siemens DRIVE-CLiQ interface drawing – dual readhead input

Dimensions and tolerances in mm

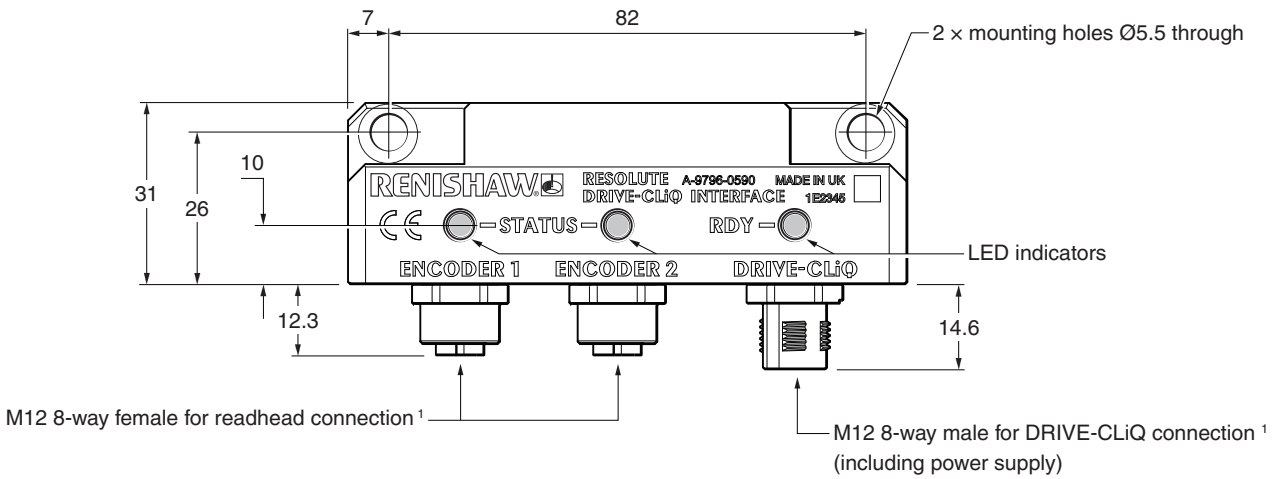

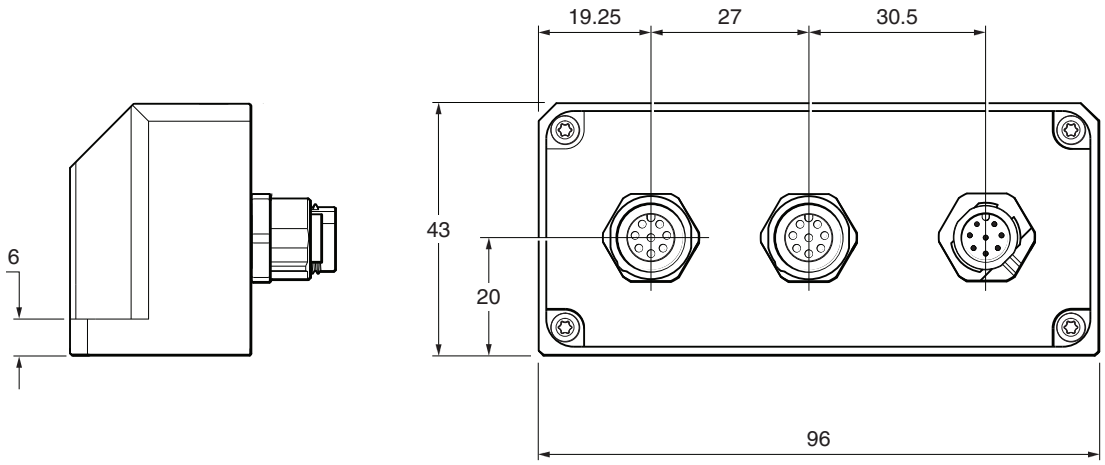

Interface part number	Compatible readheads
A-9777-0590	RAxxDA
	RAxxDS
A-9796-0590	RAxxDB
	RAxxDR

[1] Maximum tightening torque 4 Nm.

Electrical connections

Grounding and shielding [1] – single readhead systems

Single-shielded cable [2]

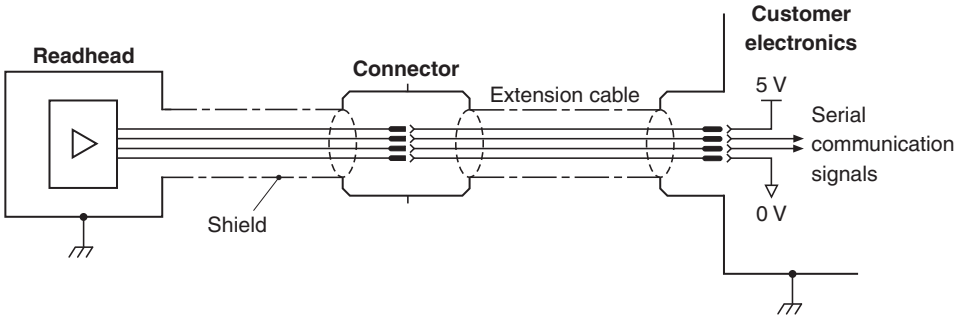

IMPORTANT:

- The shield should be connected to the machine earth (Field ground).
- If the connector is modified or replaced, the customer must ensure both 0 V cores (white and green) are connected to 0 V.

Double-shielded cable [2]

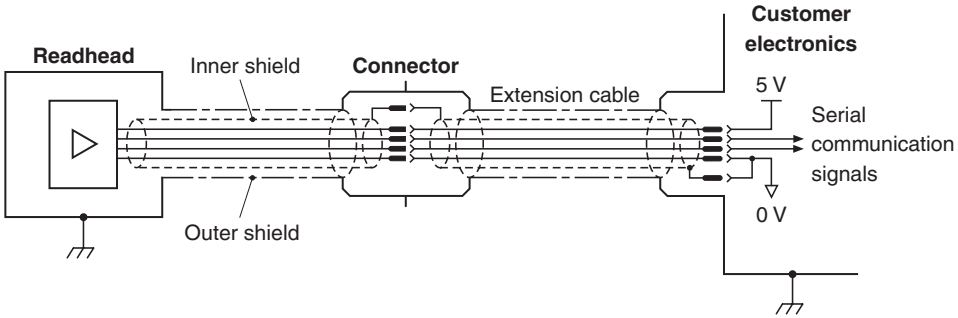

IMPORTANT:

- The outer shield should be connected to the machine earth (Field ground). The inner shield should be connected to 0 V at customer electronics only. Care should be taken to ensure that the inner and outer shields are insulated from each other.
- If the connector is modified or replaced, the customer must ensure both 0 V cores (white and green) are connected to 0 V.

[1] RESOLUTE BiSS, FANUC, Mitsubishi, Panasonic/Omron, and Yaskawa readheads only. For Grounding and Shielding arrangements for RESOLUTE Siemens DRIVE-CLiQ systems, refer to page 39 and page 40.

[2] RESOLUTE Yaskawa readheads are single-shielded cable only.

Grounding and shielding – single readhead systems (RESOLUTE Siemens DRIVE-CLiQ systems only)

Single-shielded cable

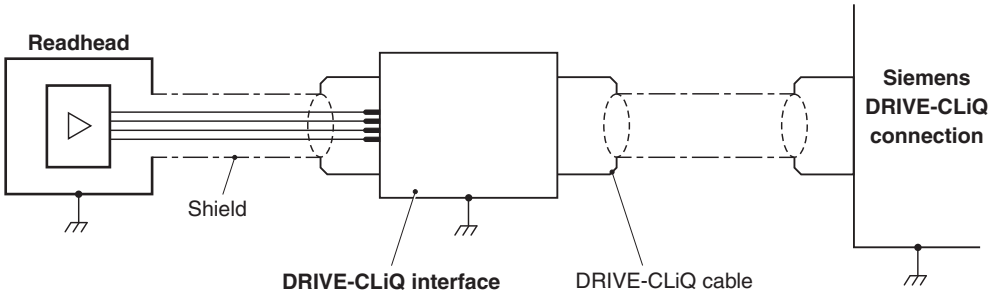

Double-shielded cable

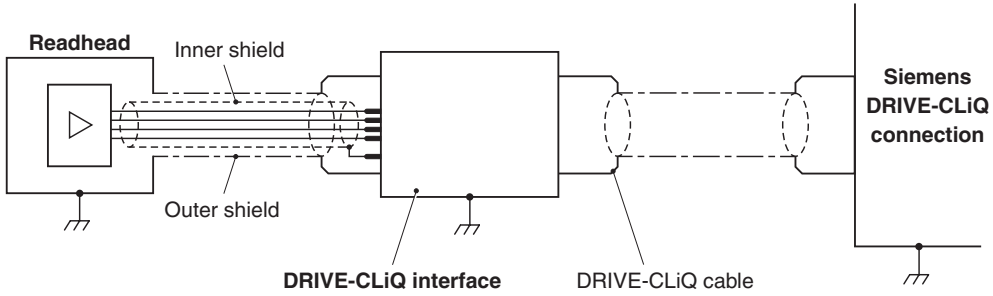

IMPORTANT: If reterminating double-shielded readhead cable, care should be taken to ensure that the inner and outer shields are insulated from each other. If the inner and outer shields are connected together, this will cause a short between 0 V and earth, which could cause electrical noise issues.

Grounding and shielding – dual readhead systems (RESOLUTE Siemens DRIVE-CLiQ systems only)

For high-speed applications, it is recommended to use similar cable lengths for each readhead to ensure the readings are simultaneous and achieve the highest accuracy.

The DRIVE-CLiQ cable is a proprietary part and is not supplied by Renishaw plc.

Single-shielded cables

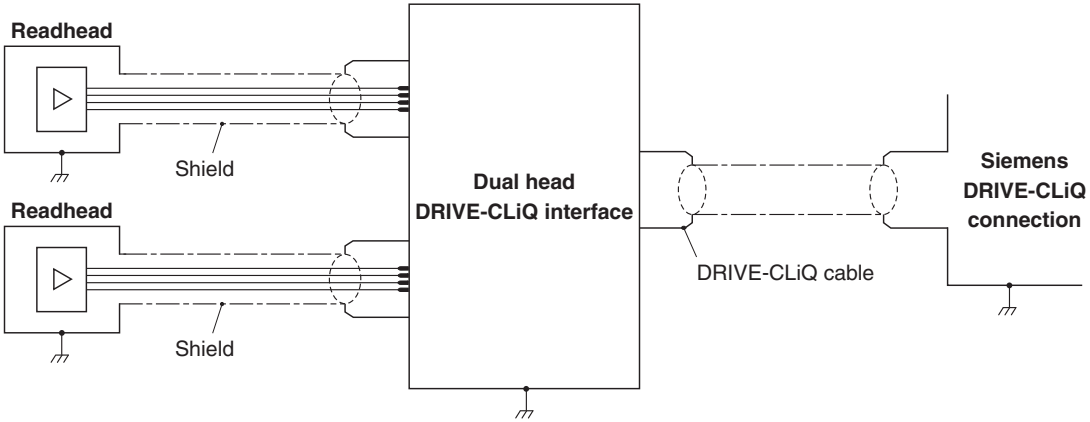

Double-shielded cables

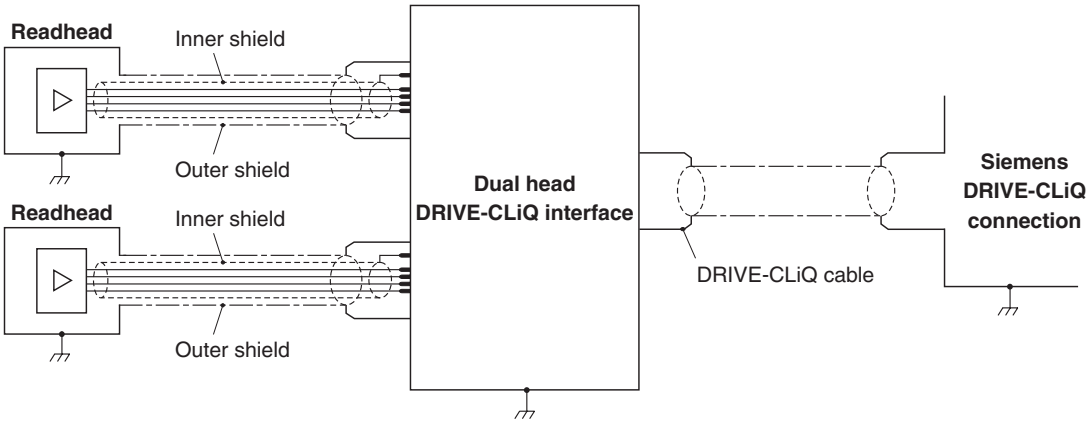

General specifications

Power supply [1]		5 V ±10%	1.25 W maximum (250 mA @ 5 V)
	(DRIVE-CLiQ system) [2]	24 V	Single readhead system: 3.05 W maximum (encoder: 1.25 W + interface: 1.8 W). Dual readhead system: 4.3 W maximum (2 × encoders: 1.25 W each + interface: 1.8 W). 24 V power is provided by the DRIVE-CLiQ network.
		Ripple	200 mVpp maximum @ frequency up to 500 kHz
Sealing	(readhead - standard and ETR)		IP64
	(readhead - UHV)		IP30
	(DRIVE-CLiQ interface)		IP67
Acceleration	(readhead - standard and UHV)	Operating	500 m/s², 3 axes
	(readhead - ETR)	Operating	300 m/s², 3 axes (–40 °C to 0 °C); 500 m/s², 3 axes (0 °C to 80 °C)
Shock	(readhead and interface)	Non-operating	1000 m/s², 6 ms, ½ sine, 3 axes
Maximum acceleration of scale with respect to readhead [3]			2000 m/s²
Vibration	(readhead - standard and ETR)	Operating	300 m/s², 55 Hz to 2000 Hz, 3 axes
	(readhead - UHV)	Operating	100 m/s², 55 Hz to 2000 Hz, 3 axes
	(DRIVE-CLiQ interface)	Operating	100 m/s², 55 Hz to 2000 Hz, 3 axes
Mass	(readhead - standard and ETR)		18 g
	(readhead - UHV)		19 g
	(cable - standard and ETR)		32 g/m
	(cable - UHV)		19 g/m
	(DRIVE-CLiQ interface)		218 g
Readhead cable	(standard and ETR)		7 core, tinned and annealed copper, 28 AWG Outside diameter 4.7 ±0.2 mm Single-shielded: Flex life > 40 × 10^6 cycles at 20 mm bend radius Double-shielded: Flex life > 20 × 10^6 cycles at 20 mm bend radius UL recognised component
	(UHV)		Silver-coated copper braided single screen FEP core insulation over tin-plated copper wire.
Maximum readhead cable length			10 m (to controller or DRIVE-CLiQ interface) (Refer to Siemens DRIVE-CLiQ specifications for maximum cable length from DRIVE-CLiQ interface to controller)

CAUTION: The RESOLUTE encoder system has been designed to the relevant EMC standards, but must be correctly integrated to achieve EMC compliance. In particular, attention to shielding arrangements is essential.

1 Current consumption figures refer to terminated RESOLUTE systems. Renishaw encoder systems must be powered from a 5 Vdc supply complying with the requirements for SELV of standard IEC 60950-1.

2 The Renishaw DRIVE-CLiQ interface must be powered from a 24 Vdc supply complying with the requirements for SELV of standard IEC 60950-1.

3 This is the worst case figure that is correct for the slowest communications clock rates. For faster clock rates, the maximum acceleration of scale with respect to the readhead can be higher. For more details, contact your local Renishaw representative.

RESA30 and REXA30 ring technical specifications

Pitch	30 µm
Material	303/304 stainless-steel
Coefficient of thermal expansion (at 20 °C)	15.5 ±0.5 µm/m/°C

RENISHAW
apply innovation™

www.renishaw.com/contact

#renishaw

+44 (0) 1453 524524 uk@renishaw.com

Part no.: M-9553-9735-04-A
Issued: 03.2023